Smart Energy Meter with Real Time Monitoring System

Md. Saffat Hossain
Department of Electrical and Electronics Engineering
East West University, Dhaka, Bangladesh
saffat627@gmail.com

Md. Mehedi Hassan
Department of Electrical and Electronics Engineering
East West University, Dhaka, Bangladesh
hassan.eee18@gmail.com

2024 13th International Conference on Electrical and Computer Engineering (ICECE) | 979-8-3315-3178-2/24/$31.00 ©2024 IEEE | DOI: 10.1109/ICECE64886.2024.11024970

***Abstract*—This paper presents the design and testing of a smart energy meter developed using Arduino Mega and GSM technology, aimed at addressing the limitations of traditional digital energy meters in Bangladesh and other regions which lack real-time monitoring and timely alerts for consumers. The smart meter provides real-time monitoring of energy usage, remote control capabilities, and SMS alerts for excessive consumption, significantly enhancing consumer awareness and energy efficiency. Utilizing the PZEM-004T module, it measures current, voltage, and power accurately, while the ESP8266 Wi-Fi module facilitates data transmission to the My Device Cayenne online server. The testing results indicate high accuracy in current readings, with errors between 0.31% to 15.75% depending on load type, and power measurement errors under 5.55% for resistive loads, but for inductive loads, they exceeded 8% due to power factor variations. The system effectively monitors and communicates energy usage in real-time, helping users track consumption. However, challenges include potential security risks with GSM, communication barriers, and limited storage capacity. Despite these issues, the smart energy meter is a significant improvement in modern energy systems, offering transparent, real-time usage data that encourages energy efficiency and helps suppliers manage demand. Future improvements will focus on integrating prepayment systems, fault detection, and better data management to overcome current limitations and further enhance the meter's capabilities**

Keywords— Smart Meter, Arduino Mega, GSM Technology, PZEM-004T, ESP8266 Wi-Fi Module, Real-Time Data Monitoring, Energy Consumption, Bill Calculation, Remote Control, Energy Management.

I. Introduction

In Bangladesh, the traditional electromechanical induction-type watt-hour meter has been the standard for measuring electricity consumption. However, the recent shift to prepaid meters reflects government efforts to digitize the energy sector. These prepaid meters require users to pay in advance for electricity and necessitate code input to check balance and consumption. Unfortunately, they do not provide warnings for excessive usage or inform consumers about potential penalties for exceeding limits during peak hours, which can strain load distribution companies given the country's limited power production capacity. Traditional digital energy meters in Bangladesh cannot monitor energy usage in real time or alert consumers of peak-hour penalties. Inefficiency in energy consumption complicates demand management. The lack of real-time monitoring, two-way communication, and excessive consumption alerts increases this circumstance. These existing meters lack remote management, making energy efficiency and consumption issues difficult to manage. To address these challenges, our research proposes an upgraded metering system utilizing Internet of Things (IoT) technology, enabling wireless communication and real-time monitoring, GSM technology enables SMS alerts for excessive consumption, ensuring communication in areas without internet access. Thereby reducing manual interventions and enhancing consumer awareness of electricity usage.

The proposed energy meter system integrates an embedded microcontroller with the PZEM-004T AC Digital Multifunction Meter, which measures essential electrical parameters such as voltage, current, active power, energy, power factor, and frequency. The primary objective is to establish a robust two-way communication between consumers and suppliers, enabling real-time monitoring and control of electricity usage to enhance transparency and efficiency in energy consumption [1, 2].

Despite these advancements, the latest metering technology in Bangladesh primarily consists of prepaid meters. The Dhaka Electric Supply Company (DESCO) has introduced prepaid metering systems in select areas; however, these systems currently lack the essential two-way communication capabilities that characterize modern smart meters. This limitation restricts the potential benefits of real-time monitoring and consumer engagement, underscoring the need for a transition to more sophisticated metering solutions that can enhance both utility operations and consumer experiences.

II. Literature Review

Traditional electricity monitoring has relied on analog meters, which require manual monthly readings to assess energy consumption (Alam et al., 2019). Although regions like those serviced by the Dhaka Electric Supply Company (DESCO) have adopted prepaid metering systems, these lack features for two-way communication and real-time monitoring. Consequently, users remain unaware of their consumption patterns until the end of the billing cycle, affecting consumer engagement and utility management effectiveness (Zhang et al., 2021) [3].

The transition from analog to digital metering, driven by smart meters, has become essential in smart grid technology (Chen et al., 2020). These devices use wireless networks like GSM to transmit energy usage data to utility providers without physical meter readings, simplifying the billing process and reducing meter tampering issues, thus enhancing the integrity of the energy measurement system (Raza et al., 2021) [4].

XXX-X-XXXX-XXXX-X/XX/$XX.00 ©20XX IEEE
979-8-3315-3178-2/24/$31.00 ©2024 IEEE

Authorized licensed use limited to: VTU Consortium. Downloaded on March 26,2026 at 15:28:10 UTC from IEEE Xplore. Restrictions apply.

In developed countries such as Sweden, Norway, and the United States, the adoption of smart metering technologies has significantly enhanced energy management capabilities (Sadeghi et al., 2022). Meanwhile, in Bangladesh, the emergence of microgrid systems is revolutionizing the energy landscape, offering localized solutions for energy distribution challenges. This transformation is propelled by smart meters that transition traditional metering methods into more consumer-friendly solutions through advanced technology (Khan et al., 2023) [5].

A recent study developed an Internet of Things (IoT)-based smart energy meter using the PZEM-016 AC Energy Meter, RS-485 UART Serial Converter, NodeMCU ESP8266, Arduino Uno R3, and the Blynk IoT Application. This system facilitates real-time monitoring of energy consumption. The Blynk application's readings were validated against actual meter readings over 48 hours, demonstrating the feasibility of integrating IoT with traditional energy measurement tools. However, the system's design lacks capabilities for sending proactive alerts or enabling remote utility control [6].

Another research explored the capabilities of low-cost power meters using technologies like the ESP8266 microcontroller and PZEM-016 meter, emphasizing the importance of wireless connectivity and the MQTT protocol for efficient data exchange. This study aimed to provide accessible energy management tools for sectors with budget constraints, although it did not fully address the challenges of two-way communication and real-time consumer engagement [7].

A kWh meter monitoring system for boarding house payments was developed using the Blynk application and NodeMCU technology, focusing on the importance of real-time energy monitoring to reduce wastage and enhance efficiency. The successful implementation of smart energy meters in households has demonstrated their potential in boosting consumer awareness and engagement regarding energy consumption. Continued innovation in this field is necessary as demand for efficient energy solutions grows [8].

The electric power sector is undergoing significant changes to enhance grid stability, meet rising energy demands, and optimize the use of distributed generators through the implementation of smart microgrids. These grids leverage IoT and digital technologies to monitor, control, and manage energy consumption efficiently. IoT-based smart energy monitoring systems are crucial for this transition, improving operational reliability and enabling real-time monitoring and management of energy resources, as well as detecting electricity theft [9].

Understanding electrical energy consumption is crucial for maintaining the performance and longevity of electronic devices. Recent advancements have led to sophisticated monitoring systems that utilize microcontrollers and IoT technologies to deliver accurate and timely data on energy usage. These systems empower users to track and manage their energy consumption effectively, optimizing usage and enhancing user awareness [10, 11].

Research Gap:

- Energy meters lack real-time monitoring.
- Consumer-utility provider communication is one-way.
- No SMS alerts for excessive usage.
- Limited remote control for distribution companies.

III. METHODOLOGY

The smart meter developed in this study incorporates several advanced features designed to enhance energy management and consumer awareness. These features include:

The smart meter system provides real-time energy consumption data accessible through the meter display and server, with the ability to transmit this data to the power distribution center via Wi-Fi for timely updates. Distribution companies can remotely manage and control these meters for efficient adjustments and monitoring. The system stores usage history on the server as backup, albeit with limited storage capacity. Additionally, it offers SMS notifications via GSM technology when energy usage exceeds predefined limits and allows users to set current limits, enhancing control over energy consumption.

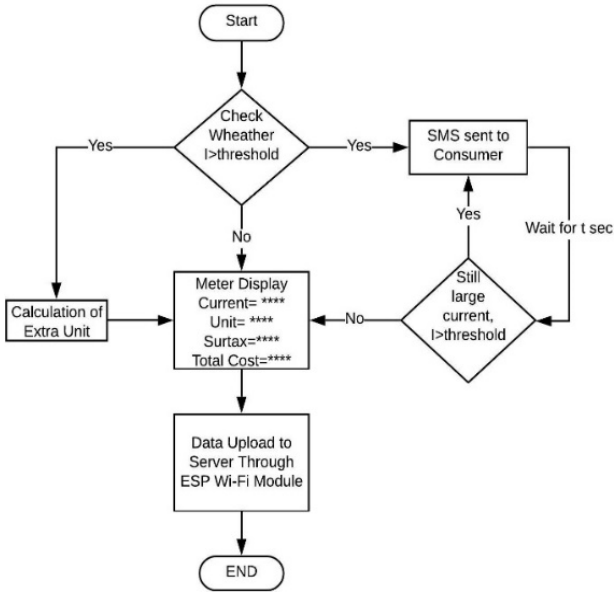

Fig. 1. WorkFlow Chart.

The proposed device integrates hardware and software to create a smart communication system for electric meters. Key hardware components include the Arduino Mega 2560, ESP8266 Wi-Fi module, PZEM-004T energy monitoring module, GSM SIM900 module, LCD display, relay, breadboard, and current sensor, enabling real-time monitoring and communication of electricity usage. The software is developed using the Arduino IDE and My Device Cayenne for cloud data management and visualization, enhancing user interaction and energy management efficiency.

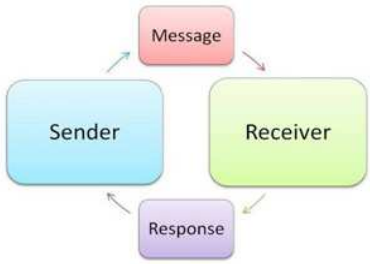

Fig. 2. Two-Way Communication Process [7]

Authorized licensed use limited to: VTU Consortium. Downloaded on March 26,2026 at 15:28:10 UTC from IEEE Xplore. Restrictions apply.

A. Hardware Part

1) Arduino Mega

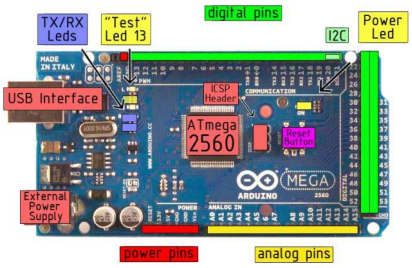

Fig. 3. Arduino ATmega 2560

The Arduino Mega, powered by an Atmega 2560 microcontroller, operates at 16 MHz with 54 digital I/O pins and 16 analog inputs. It supports USB, 3.3V and 5V outputs, and handles input voltages from 6V to 20V, ideally between 7V and 12V.

2) ESP 8266 Wi-Fi Module

The ESP8266 module, an upgrade of the ESP8266EX, supports NodeMCU for developing Wi-Fi projects quickly. It features wireless programming, multiple network modes, complies with 802.11 b/g/n, and offers WPA/WPA2 security, making it suitable for smart applications and real-time data transmission.

3) PZEM 004T

The PZEM module is an AC multifunction power monitoring device that measures voltage, current, power, and energy. It can handle up to 100A within a voltage range of 80VAC to 260VAC and has a rated power of 22000W. Operating at a frequency of 45-65Hz with ±1% accuracy, it retains data even when powered off but is intended for indoor use only to prevent damage.

4) GSM Module

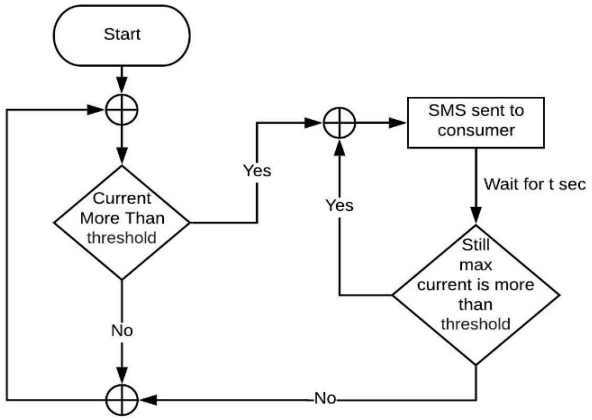

Fig. 4. Flowchart of GSM Module

The SIM900 GSM/GPRS module creates a two-way communication link between utility suppliers and consumers for smart metering. It operates on 2G/3G networks for internet connectivity via GPRS, SMS communication, and voice calls. The system monitors current usage against a threshold (e.g., 2A) and sends alerts if exceeded, promoting responsible energy consumption.

5) Relay Module

A relay system enables remote control of the meter's power supply. Using a 5V single-channel relay interface board that requires a driver current of 15-20mA, it can be directly controlled by the Arduino. This allows disconnection without physical intervention from utility companies.

6) 20x4 Arduino LCD Display Module with I2C

The project incorporates a 20x4 LCD display with an I2C interface to provide real-time information on current consumption and utility bills. The I2C module reduces wiring complexity by minimizing pin usage on the Arduino to four (VCC, GND, SDA, SCL), facilitating easier connections compared to traditional setups.

B. Software part

We used the My Device Cayenne online server to store data for our smart technology prototype. This server supports both Windows and Android applications, allowing secure access to data from our smart meter system for real-time monitoring and analysis. The provided software is a demonstration version, and for more advanced applications, setting up our own server for data storage is essential.

1) Interfacing

Fig. 5. Meter Display

The Arduino Mega connects to the PZEM 004T module via TX/RX pins to collect data, which it then sends to the ESP Wi-Fi module. This module facilitates real-time data storage and online monitoring, controlling the relay through an online portal. Additionally, the ESP connects to My Device Cayenne, enabling seamless real-time monitoring and data exchange between the smart meter and the online server.

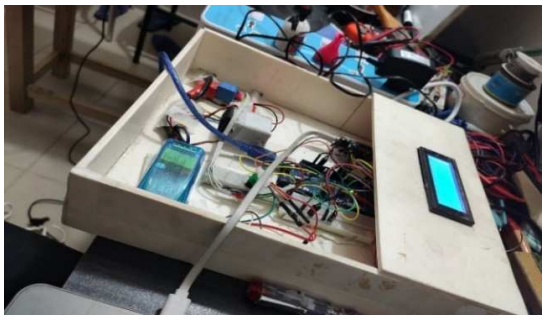

Fig. 6. Meter with all tools

Fig. 7. 100W bulb as a Load

Authorized licensed use limited to: VTU Consortium. Downloaded on March 26,2026 at 15:28:10 UTC from IEEE Xplore. Restrictions apply.

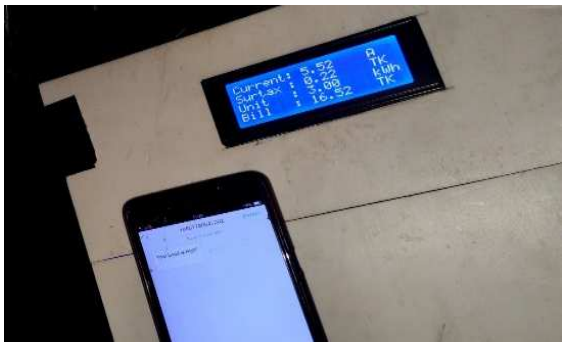

Fig. 8. SMS Sent for Extra Use of Current (More than 3A)

C. Threshold Current Scenario

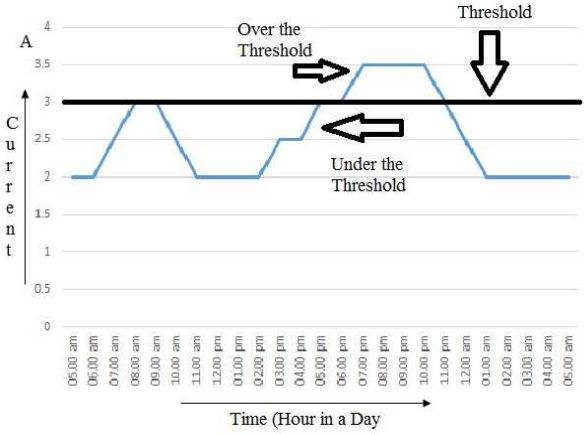

Fig. 9. Threshold Current Line.

In Bangladesh, utility companies typically provide a minimum load of 2 kW (9.09A at 220V) to LT consumers, adjustable based on demand. For our prototype smart meter, we assumed a threshold current of 3A to implement the project. This value was selected arbitrarily for testing purposes and can be adjusted in future iterations based on consumer agreements with utility providers or the specific requirements of the system.

D. Current Exceeds the Threshold

If the maximum current exceeds the threshold, a fine for extra consumption is applied. The fine is calculated as:

Fine Amount = Total fine+(extra unit×fine amount)

The total bill is then calculated as:

Bill = (unit×unit cost)+(extra unit×fine amount)

The fine is imposed due to excess current consumption by the user, with the Arduino code in the microcontroller calculating the extra units.

E. Current Is Within the Threshold

If the maximum current stays within the threshold, no fines are included in the bill. The calculation is:

Bill = (unit × unit cost) + (extra unit × fine amount)

Here, the fine amount is zero, and extra units consumed are recorded as 0 kWh.

F. Circuit Diagram

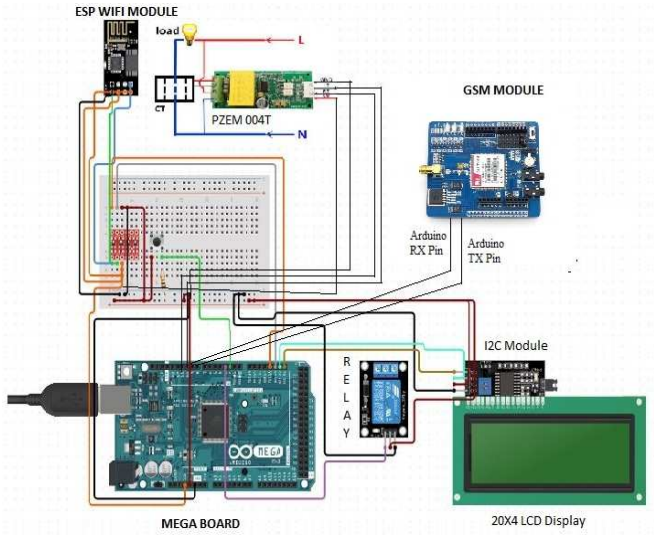

Fig. 10. Circuit Diagram``

G. Device Workflow

1) Logging into the Device

To control the meter, authorized personnel must log in to the server using a unique ID and password. The server, created specifically for this project, allows direct login without a sign-up process.

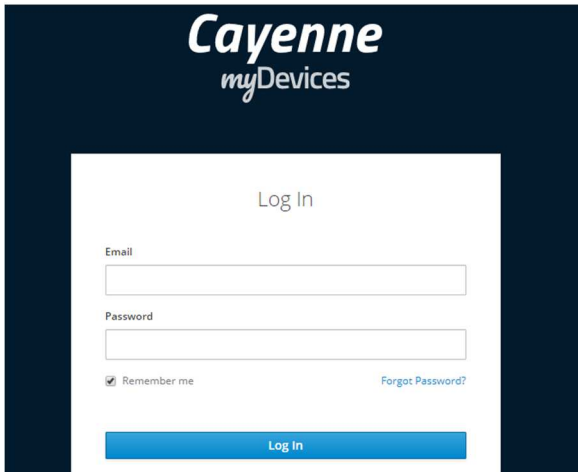

Fig. 11. Sign in process

To start, the authority must press the "Sign In" button on the server interface, prompting them to enter their ID and password. Once the correct credentials are provided, access to the meter management system is granted, allowing monitoring and control of connected consumers' electricity usage.

2) MAIN SCREEN OF THE SERVER

Upon successful login, the authority is directed to the main screen of the smart meter system, serving as the central hub for monitoring and controlling connected meters. From this interface, they can access the "Control" button to turn the meter ON or OFF remotely, allowing them to start or shut down the meter as needed.

Authorized licensed use limited to: VTU Consortium. Downloaded on March 26,2026 at 15:28:10 UTC from IEEE Xplore. Restrictions apply.

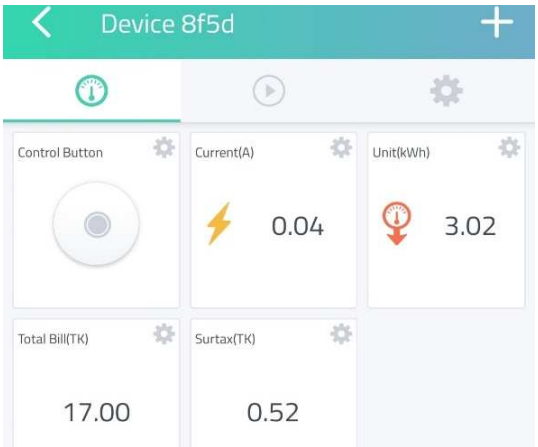

Fig. 12. Server Display

The main screen displays key metrics about the meter's performance, including current (A), units consumed (kWh), total bill (Tk), and any fines or surcharges (Tk). As this is a prototype, these are the primary metrics shown, but the system can be expanded to include additional data points based on utility provider needs. While we considered the fine amount for billing simplicity, the actual billing process may differ, which we address in the future enhancement section.

H. Total Usage of Current

The main screen includes a graph depicting the consumer's current usage over time, with the X-axis representing time and the Y-axis showing current in amperes. This visual aid allows the authority to monitor consumption patterns and identify excessive usage. We have set a current threshold of 3A, and if exceeded, the system will send an SMS alert to the consumer's registered mobile number, promoting responsible energy usage.

Fig. 13. Current usage

I. Electricity Consumption

The graph displays the consumer's electricity usage in kilowatt-hours (kWh), allowing the authority to monitor this data from the server room. In this graph, the X-axis represents time, while the Y-axis indicates the units consumed in kWh. This visualization helps the authority track consumption trends and make informed decisions regarding energy management.

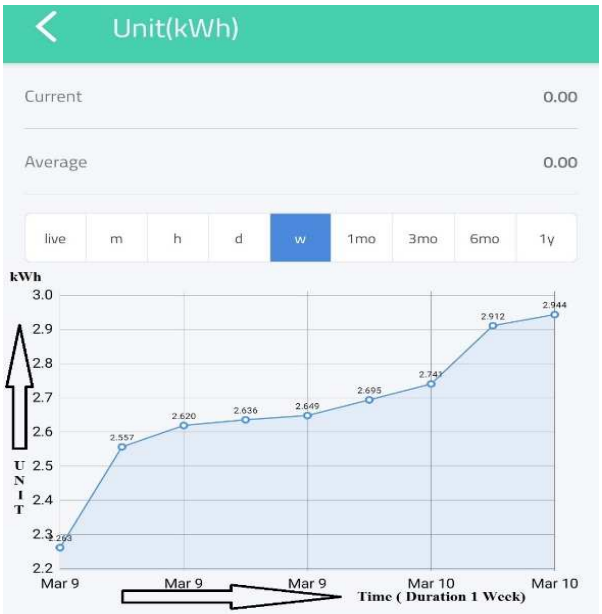

Fig. 14. Electricity Consumption

IV. Result Analysis

1) Accuracy of Measuring Current, Voltage, Power

The PZEM-004T module in our system is pre-calibrated, eliminating the need for additional calibration. We connected it to our setup, and the Arduino accurately displayed the results. To validate the measurements, we compared the PZEM-004T readings with reference multimeters, which showed high accuracy, ensuring its reliability for electricity monitoring within our smart meter system.

TABLE I. ACCURACY MEASUREMENT: (CURRENT)

Ammeter(A)	Meter Reading(A)	Error (%)
0.188	0.19	1.06
0.273	0.23	15.75
0.44	0.44	2.17
0.52	0.51	1.92
0.84	0.82	1.17
0.95	0.94	1.05
1.08	1.06	1.38
1.20	1.19	0.50
1.99	2.00	0.40
2.50	2.51	0.71
3.23	3.22	0.31
6.55	5.67	13.44

Table 1 shows accurate measurements from our smart meter for resistive loads, but some discrepancies for inductive loads. To compare the current readings, we used a clamp meter for error analysis to reduce the meter's error margin. The clamp meter-based error analysis helped identify and minimize errors, improving the smart meter's accuracy and reliability under different load conditions.

Errors can be minimized using state estimation algorithms, such as the Weighted Least Squares (WLS) method. The WLS method reduces the sum of the weighted squared residuals

Authorized licensed use limited to: VTU Consortium. Downloaded on March 26,2026 at 15:28:10 UTC from IEEE Xplore. Restrictions apply.

between observed and estimated measurements. The formula is:

$$\hat{x} = (H^T \times W \times H)^{-1} \times H^T \times W \times z \quad (1)$$

where: 'H' is the Jacobian matrix, indicating how measurements relate to state variables. 'W' is the weight matrix, often the inverse of the covariance matrix of measurement errors, reflecting the reliability of measurements. 'z' is the vector of actual measurements, with '$\hat{x}$' representing the estimated state values.

2) Voltage

TABLE II. ACCURACY MEASUREMENT: VOLTAGE

Voltmeter(V)	Meter Reading(V)	Error (%)
0-80	0	10
110	110	0
220	218~221	0.45
230	230	0

Table 2 indicates that the meter reading displays 0V for the 0-80V range, as the PZEM-004T is designed to measure voltages between 80V and 260V. While this results in a slight discrepancy, it is considered negligible for the purposes of our measurements.

3) Power

TABLE III. ACCURACY MEASUREMENT: POWER

Wattmeter (Watt)	Meter Reading (Watt)	Erro (%)
18 (Bulb)	17	5.55
20 (Bulb)	19	5
35 (Laptop)	32	8.571
60 (Bulb)	58	3.33
100 (Bulb)	98	2
200 (Bulb)	196	4
1500 (Air Conditioner)	1327	11.53

Table 3 shows that power consumption errors for resistive loads are below 5.55%, while those for inductive loads exceed 8%, mainly due to the power factor (pf). Implementing power factor correction measures, like a capacitor bank, could reduce these errors and enhance measurement accuracy.

1) Energy Calculation

To calculate the daily energy consumption, we can use the following equation:

$$\boldsymbol{E}\left(\frac{kWh}{Day}\right) = \frac{P \times t}{1000} \quad (2)$$

Where: 'E' is the energy consumption in kilowatt-hours (kWh) per day. 'P' is the power in watts (W), 't' is the usage hours per day.

To calculate daily energy consumption in kWh, multiply power (in watts) by daily usage hours and divide by 1000. This formula estimates daily energy usage based on power consumption and duration.

V. CONCLUSION

In conclusion, our smart meter prototype demonstrates high performance in measuring resistive loads, enabling two-way control, and promoting transparency in energy use. However, future improvements are needed to address portable server security risks, GSM module limitations, and challenges with long-term data management on free servers like My Device Cayenne. Rising energy costs and limited mobile access further highlight the need for robust communication and user privacy solutions. Our research suggests incorporating prepayment systems, user feedback mechanisms, fingerprint security, automated power management, online payments, and unit price notifications to enhance efficiency. The integration of gas metering and real-time pricing could benefit both domestic and industrial users through better demand forecasting and cost savings during off-peak hours. By modernizing energy distribution with real-time monitoring and communication, our system aims to empower consumers and optimize energy allocation for a sustainable future.

REFERENCES

[1] Ritheesh, P., Kumar, N.K. and Singh, K. (2023). Smart Classroom: Real Time Monitoring of Classroom through IoT. 2023 Third International Conference on Secure Cyber Computing and Communication (ICSCCC), 9, pp.202–206. doi:https://doi.org/10.1109/icsccc58608.2023.10176619.

[2] Abir Hossain Shuvo, Hasan, C.M., Hassan, M.M. and Rahman, A. (2024). Floating Sun Tracker Solar Panel to Power up Irrigation Pump. *IEEE*, [online] pp.1–6. doi:https://doi.org/10.1109/icaccess61735.2024.10499512.

[3] Sohan Ul Alam, Ahmed, R., Imam, Md.Sayed., Farshid, M., Hossain, Md.Afzal. and Islam, Md.Ashikul. (2019). Design and Implementation of Website based Energy Consumption Monitoring and Controlling. IEEE. doi:https://doi.org/10.1109/iccci.2019.8821978.

[4] Dahunsi, F.M., Ijadunola, H., Melodi, A.O. and Ponnle, A.A. (2022). Analysis of GSM, Wi-Fi and LPWAN communication technologies for Smart energy metering circuits. [online] IEEE Xplore. doi:https://doi.org/10.1109/NIGERCON54645.2022.9803085.

[5] Sheikh Marzouk Alam, Khan Muhammad Eshbaat, Amirah Amirah and Md. Abdur Razzak (2023). Feasibility Analysis of a Hybrid Off-Grid Microgrid to Power Saint Martin's Island of Bangladesh. IEEE. doi:https://doi.org/10.1109/icps60393.2023.10428738.

[6] Nebrida, A.P., Amador, C.D., Madiam, C.M. and Ranche, G.J.S. (2023). Development of Smart Meter to Monitor Real Time Energy Consumption for Sustainability. International Journal of Sustainable Construction Engineering and Technology, [online] 14(4), pp.28–39. Available at: https://publisher.uthm.edu.my/ojs/index.php/IJSCET/article/view/12984.

[7] Manowska, A., Wycisk, A., Nowrot, A. and Pielot, J. (2022). The Use of the MQTT Protocol in Measurement, Monitoring and Control Systems as Part of the Implementation of Energy Management Systems. Electronics, 12(1), p.17. doi:https://doi.org/10.3390/electronics12010017.

[8] Hidayat, R., Saragih, R. and Khair, H. (2022). KWh Meter Monitoring System for Boarding House Payments using The BLYNK and ESP32 Applications. International Journal of Health Engineering and Technology, [online] 1(3). doi:https://doi.org/10.55227/ijhet.v1i3.42.

[9] Haque, M.M., Choudhury, Z.H. and Alamgir, F.M. (2019). IoT Based Smart Energy Metering System for Power Consumers. IEEE. [online] doi:https://doi.org/10.1109/iciet48527.2019.9290661.

[10] Mohd Sajid Khan, Sharma, H. and Haque, A. (2019). IoT Enabled Real-Time Energy Monitoring for Photovoltaic Systems. IEEE. doi:https://doi.org/10.1109/comitcon.2019.8862246.

[11] Hossain, S., Md. Mehedi Hassan and Md. Abu Shayem (2024). Design and Analysis of Solar Irrigation Systems for Sustainable Rice Cultivation in Bangladesh. IEEE. doi:https://doi.org/10.1109/iceeict62016.2024.10534484.

Authorized licensed use limited to: VTU Consortium. Downloaded on March 26,2026 at 15:28:10 UTC from IEEE Xplore. Restrictions apply.